ITEM NO	QTY.	PART NO.	MATERIAL	SIZE	DESCRIPTION
1	1	---	316 SS	4" ANSI RF FLG	SUPPLY, H.W. OUTLET
2	1	---	VARIOUS	2" FNPT	PRESSURE RELIEF VALVE
3	1	---	316 SS	4" ANSI RF FLG	RETURN, C.W. INLET
4	1	---	CPVC	1 1/4"	CONDENSATE DRAIN
5	1	---	STEEL	2" NPT	GAS CONNECTION
6	1	---	316 SS	10"	VENT, EXHAUST FLUE
7	1	---	316 SS	12"	AIR INTAKE (STD. & OPT. LOCATION)
8	1	---	VARIOUS	---	DISPLAY, TEMPERATURE CONTROLLER

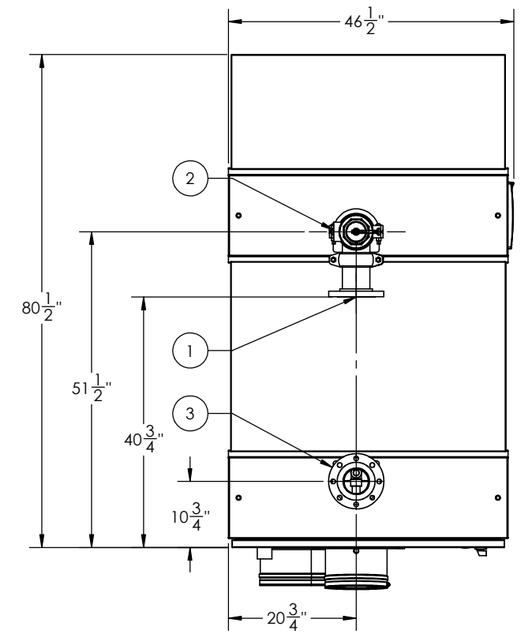

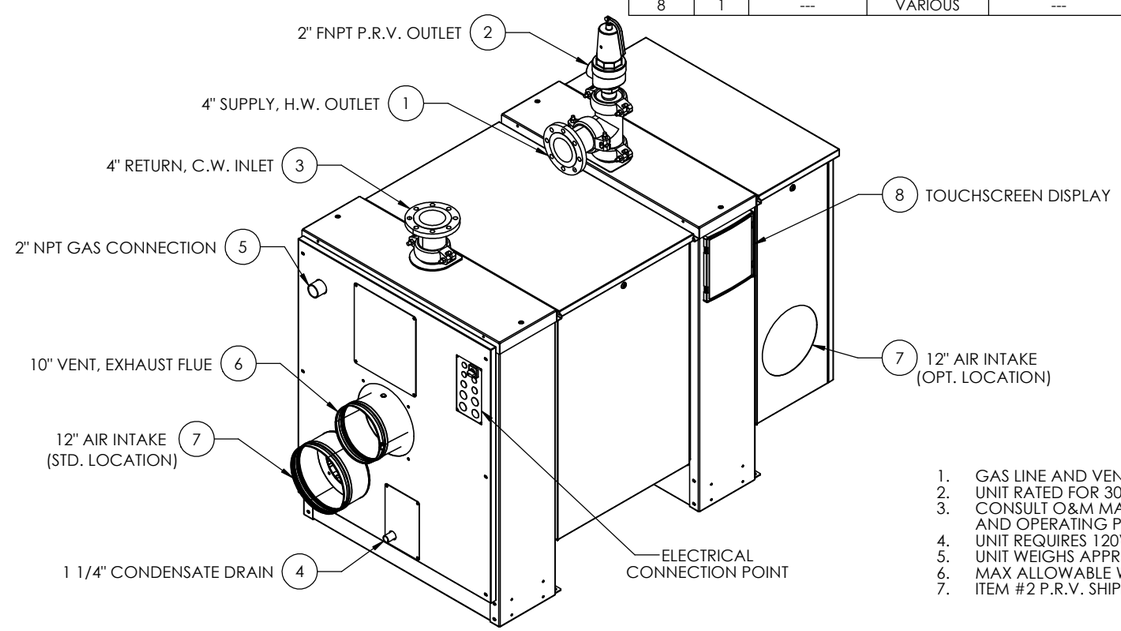

1. GAS LINE AND VENT PIPING TO BE SUPPLIED BY OTHERS
2. UNIT RATED FOR 3000 mBTU/HR
3. CONSULT O&M MANUAL FOR INSTALLATION REQUIREMENTS AND OPERATING PARAMETERS
4. UNIT REQUIRES 120V/1Ph/60Hz SUPPLY
5. UNIT WEIGHS APPROX. 1984 LBS DRY, 2273 LBS WET
6. MAX ALLOWABLE WORKING PRESSURE 145 PSI
7. ITEM #2 P.R.V. SHIPPED LOOSE

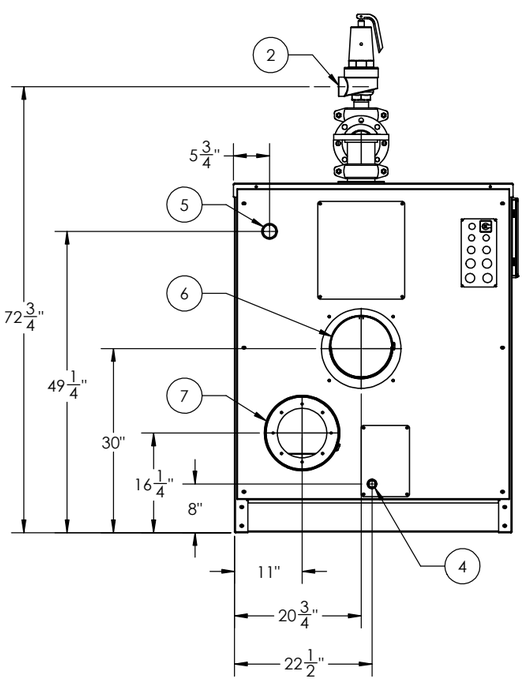

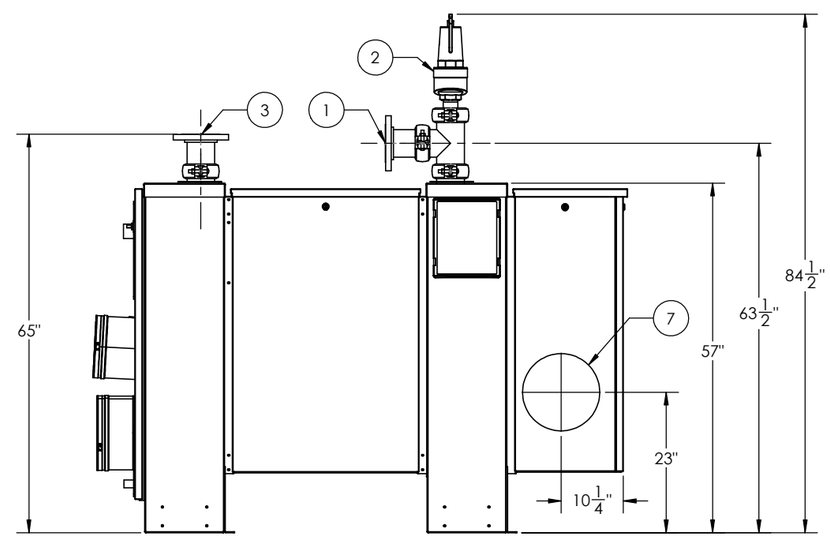

ZONE	REV.	DESCRIPTION	DATE	APPROVED
		REVISIONS		

	DATE	NAME
DRAWN	11/2/2023	JD
CHECKED	01/12/2024	TWG
ENG APPR.		
MFG APPR.		

GACE a nudyne company

Customer:

Description: MODEL E-3000
3,000,000 BTU GAS HEATER
120VAC - 1Φ - 60Hz

SIZE	DWG. NO.	REV
C	E 3000	-
SCALE: 1:16	FSCM: 19857	SHEET 1 OF 1

PROPRIETARY AND CONFIDENTIAL

THE INFORMATION CONTAINED IN THIS DRAWING IS THE SOLE PROPERTY OF THE ELECTRIC HEATER COMPANY. ANY REPRODUCTION IN PART OR AS A WHOLE WITHOUT THE WRITTEN PERMISSION OF THE ELECTRIC HEATER COMPANY IS PROHIBITED.

DIMENSIONS ARE IN INCHES
TOLERANCES:
(UNLESS OTHERWISE SPECIFIED)
FRACTIONAL ±1/4
ANGULAR: MACH ±1/2° BEND ±1°
TWO PLACE DECIMAL ±0.01
THREE PLACE DECIMAL ±0.005